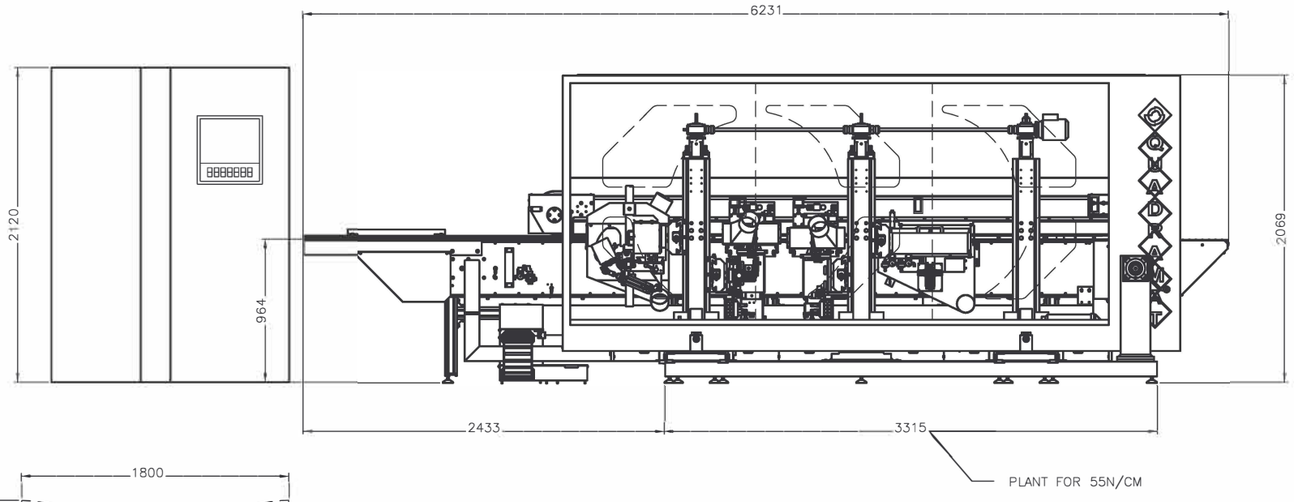

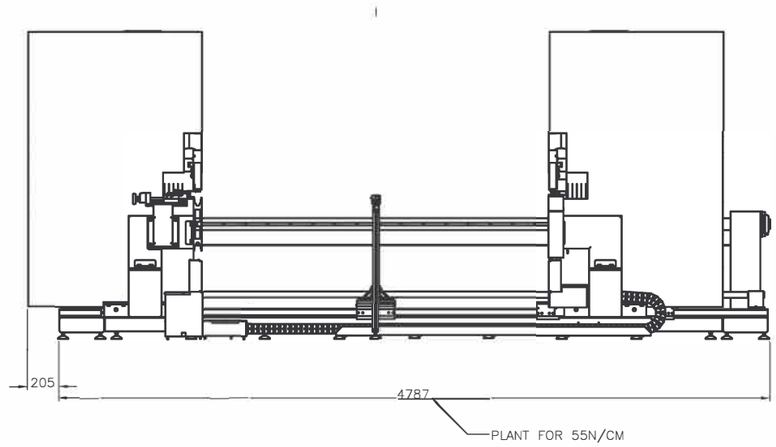

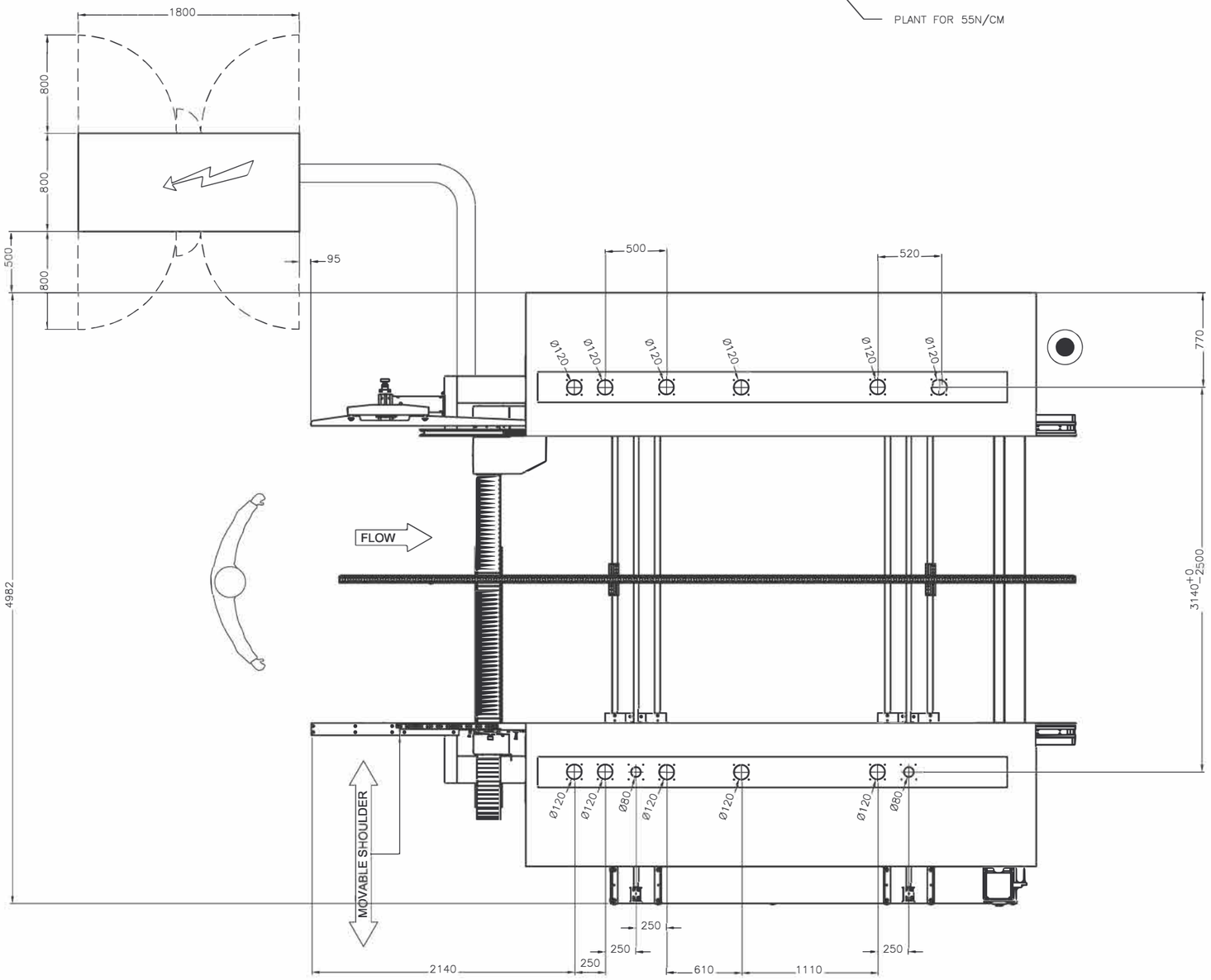

INSTALLATION DRAWING

THIS DRAWING IS PART OF THE ORDER CONFIRMATION AND IS SUBJECT TO TECHNICAL ALTERATIONS OF PARTICULARS, NOT AFFECTING LAY-OUT OR FUNCTION OF THE EQUIPMENT.

REFERENCE POINT IS MACHINE FENCE AND BEGINNING OF INFEED TABLE.

UNDERLINED MEASUREMENTS ARE NOT TO SCALE; ALL MEASURES IN MM.

CONTROL DESK: ON, OFF, EMERGENCY.

WORKING PLACE / OPERATOR.

OVERALL MACHINES HEIGHT [MM]:	2100
MACHINING PIECE LEVEL [MM]:	960
PEAK FOUNDATION LOAD [N/CM2]:	75

CUSTOMER'S RESPONSABILITY.

ELECTRICAL POWER SUPPLY 3PH; N; PE;

400	Volt	50	Hz

PNEUM. CONNECTION 6bar. 1/2"

PERIMETRAL SAFETY GUARDS.

SECURITY LIGHT BARRIER.

TIMBER BENDING TOLLERANCE 0,1MM/MT; FLOOR LEVEL TOLERANCES ±30MM ON 10MT; CONCRETE FOUNDATIONS, PLATFORMS, GANGWAYS, PROTECTIVE BARRIERS, CABLE CHANNELS, WASTE COLLECTING AND DISPLACING OF POSSIBLY EXISTING PILLARS, DOORS, BREAKS A.S.O.

PLANT REQUEST CAPACITY

	ITEM	MACHINE CODE	DESCRIPTION	POWER REQUEST [KW]	AIR REQUEST [L/MIN.]	AIR REQUEST [NL/CM.M]	EXHAUST FAN [M3/H]
	01	B32-B32	SCRIBING UNIT	7.4x2			4900
	02	J31-J31	HOGGING UNIT	10x2			2450
	03	J30-J30	HOGGING UNIT	10x2			2450
	04	J39-J39	HOGGING UNIT	0.75x2			2450
	05	B31-SX	HOGGING UNIT	5,5			1225
	06	BASE MOTORS	CARRYNG SYSTEM/SHIFTING	8,4			1085
TOTAL		POWER [KW]		TOTAL 90 KW / 240 A			
		AIR REQUEST [L/MIN.]			4800		
		EXHAUST FAN [M3/H]					14580

01	AGG.POTENZA E AMPERAGGIO TOTALE E MOD. DIMENSIONI QUADRO	CD	20/11/06

MASS (Kg):

OBTAINED FROM

QUADRAMAT S-4800-3-607-645-TS-STR-Z12 2,5

FerWood® BRILLIANT SOLUTIONS FOR WOOD

A DI QUESTO DISEGNO NOTO A TERZI O A DITTE CONCORRENTI SENZA NOSTRA AUTORIZZAZIONE

ALL RIGHTS RESERVED INCLUDING THE RIGHT TO REPRODUCE OR TO DISCLOSE TO THIRD PARTIES THIS DRAWING OR POSITION THERE OFF WITHOUT OUR WRITTEN AUTHORISATION

SIZE	SCALE	DRAWN	CHECKED	APPROVED
A1	/	CD		
		D. AB		
		02/11/06	SHEET 1 OF 1	

M3954A-REV00

REV. 01

B.O.M. VERSION: