PASSMASS	ABMASS

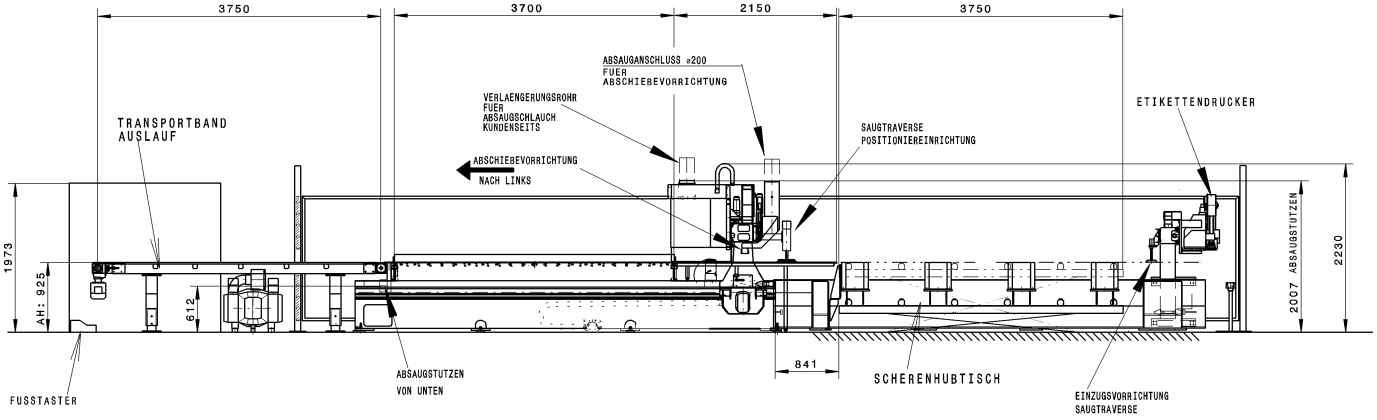

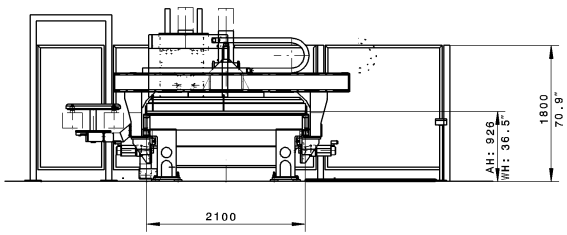

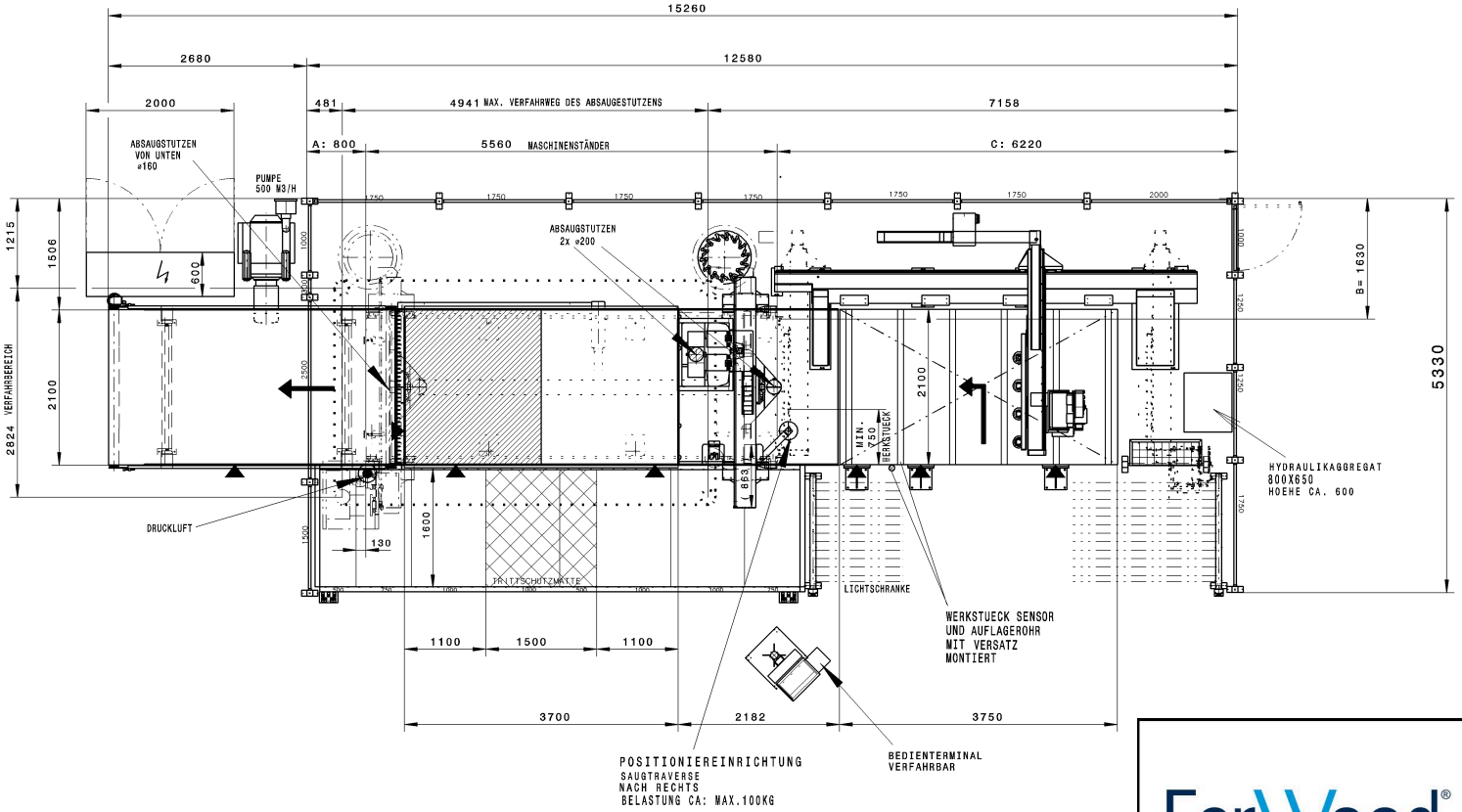

CE

FUNDAMENTPLAN
SIEHE BLATT <#>
5-320-95-2950

FerWood®
BRILLIANT SOLUTIONS FOR WOOD

PROJECT:	
CODE:	005613_MA
TYPE:	Centre D'Usinage CNC
BRAND:	WEEKE - Optimat BHP Vantage 38L
DESIGNER:	
DATE:	
FILE:	

A

12.04.2019_16:20:24