SCHEMATIC SIDE VIEW

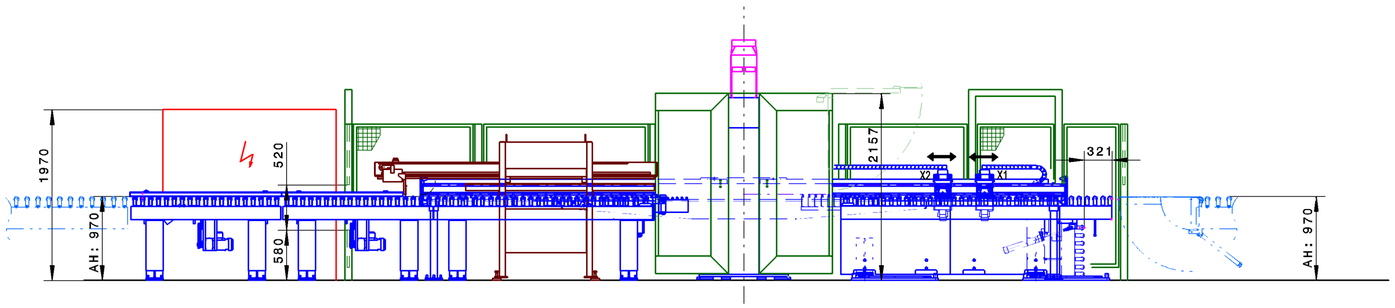

SCHEMATIC SIDE VIEW

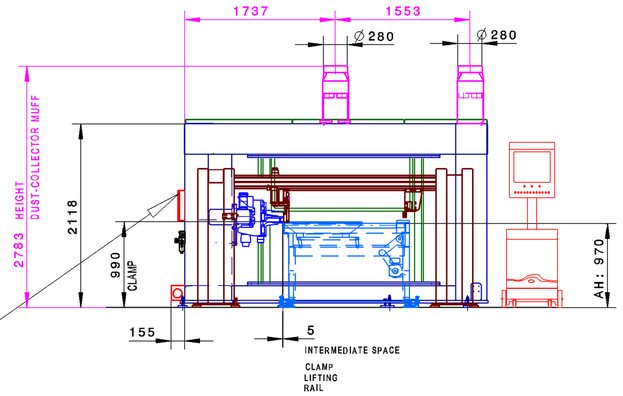

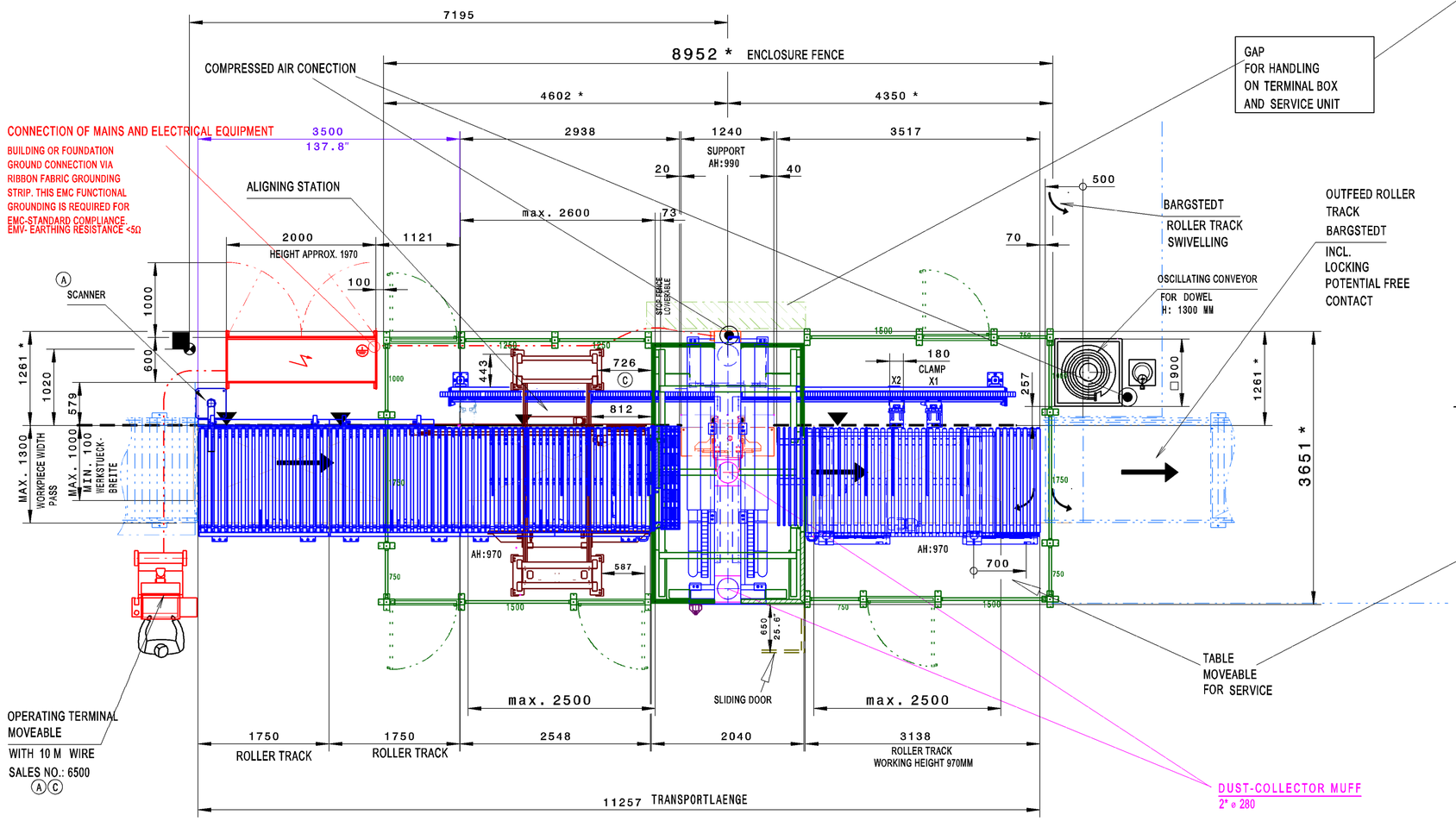

GAP
FOR HANDLING
ON TERMINAL BOX
AND SERVICE UNIT

DETAIL M 1:25
OUTFEED ROLLER TRACK
OPTIMAT BHX 500/D

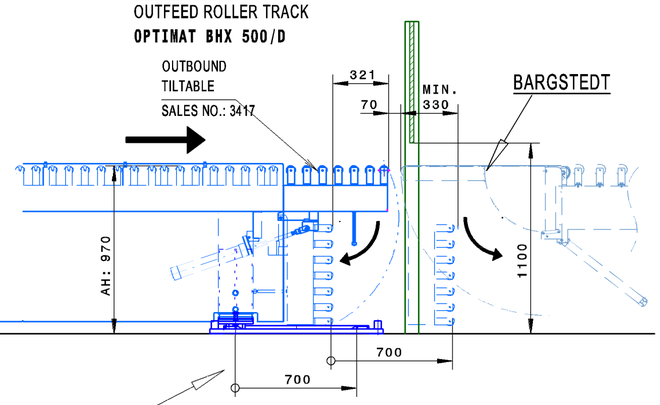

		MACH.-NO.: 0-250-14-3564
WORKPIECE SIZES	SINGLE PART	WITHOUT OUR PERMISSION THIS DRAWING MUST NOT BE REPRODUCED NOR DUPLICATED NOR MADE ACCESSIBLE TO THIRD PARTIES OR COMPETITORS
LENGTH MIN./MAX.	200 MM / 2500 MM	
WIDTH MIN./MAX. IN PROCESSING	70 MM / 1000 MM	
WIDTH MIN./MAX. IN PASS	70 MM / 1300 MM	
THICKNESS MIN./MAX. SINGLE PART	8 MM / 80 MM	
THICKNESS MIN./MAX. TWO HALVES	2*4 MM / 2*40 MM	
WORKING HEIGHT 970 MM		

BUILDING OR FOUNDATION GROUND CONNECTION
VIA RIBBON FABRIC GROUNDING STRIP.
THIS EMC FUNCTIONAL GROUNDING IS
REQUIRED FOR EMC-STANDARD COMPLIANCE.
EMV- EARTHING RESISTANCE <5Ω
PROTECTIVE CIRCUIT IS ONLY PERMISSIBLE
IN COMBINATION WITH AN
ALL-CURRENT-SENSITIVE/SELECTIVE RCD-PROTECTIVE SWITCH

AUSSENKANTE KETTEN-BAHN BZW. FESTKANTE WERKSTUECKUEBER-STAND "0"

COMPRESSED AIR CONECTION R 1/2"
SUPPLY G1"
AIR PRESSURE IN SUPPLY LINE MIN. 7BAR (102 PSI)
STANDARD COMPRESSED AIR QUALITY ACCORDING TO ISO 8573- 1
QUALITY CLASS
SOLID IMPURITIES CLASS 3
WATER CONTENT CLASS 4
TOTAL OIL CONTENT CLASS 3

WITHOUT THE SAFETY BARRIERS SUPPLIED BY HOMAG, WHICH ARE SHOWN IN THIS PLAN, THE PRODUCTION EQUIPMENT IS NOT CE-COMPLIANT, AND MUST THEREFORE NOT BE OPERATED.

ONLY IMMOVABLE WALLS ANCHORED SECURELY TO THE PRODUCTION AREA FLOOR AND THE PRODUCTION AREA ROOF ARE PERMISSIBLE AS AN ACCESS PREVENTION MEASURE AT THE CUSTOMER'S PREMISES.

* DIMENSION FOR FOUNDATION PLAN SEE 5-350-94-4040

SUBJECT TO CHANGE

FerWood®
BRILLIANT SOLUTIONS FOR WOOD

PROJECT:	
CODE:	004931_MA
TYPE:	CNC WORKING CENTER
BRAND:	WEEKE OPTIMAT BHX 500 /D
DESIGNER:	
DATE:	
FILE:	