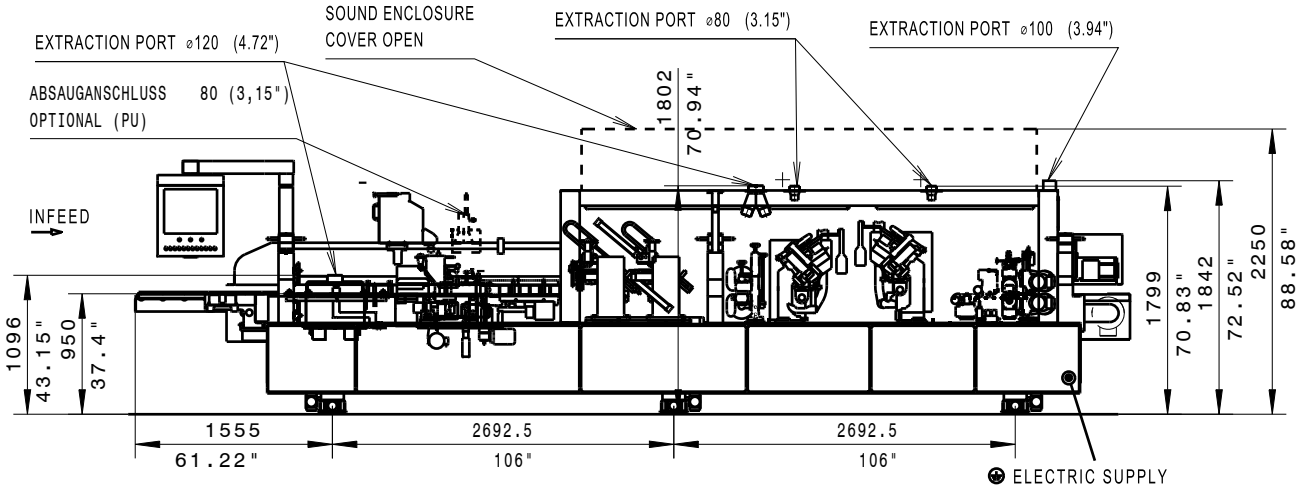
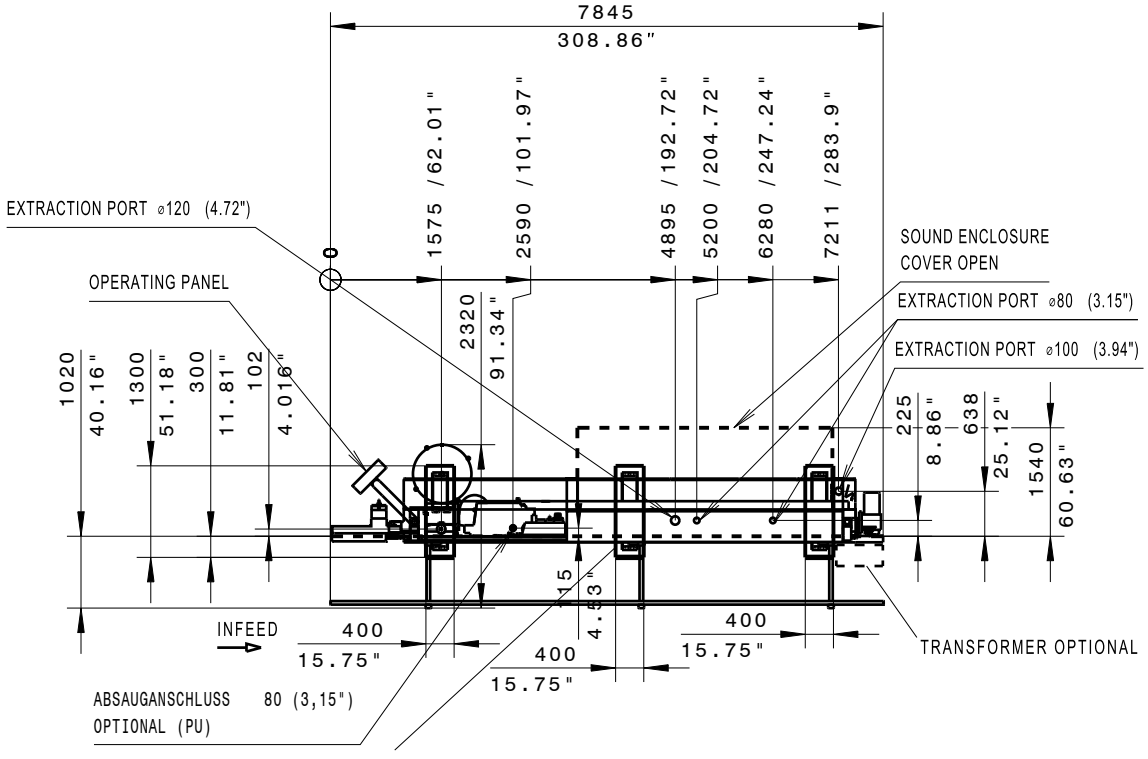




FLOOR LOAD APPROX. 0.2-0.3
N/MM2 IN AREA OF THE
MACHINE BEDS MIN. CONCRETE
THICKNESS = 200 MM

MASCH.TYPE.:
KAL211 EDITION 2262

WORKING HEIGHT 950MM (37,4")

TECHNICAL DATA

TOTAL WEIGHT	APPROX.	KG							4500	
TOTAL DUST EXTRACTION CAPACITY	APPROX.	M3/H	(CFM)						3690(2172)	
GESAMTABSAUGELEISTUNG MIT PU	APPROX.	M3/H	(CFM)						4200(2470)	
COMPRESSED AIR CONSUMPTION	APPROX.	NL/MIN	(CFM)						810 (28,6)	
NEGATIVE AIR PRESSURE IN PA			(INCH/WS)						2500(9,84)	
VOLTAGE	V			200	220	380	400	415	480	600
TOTAL CONNECTED LOAD	APPROXkW			28	28	28	28	28	28	28
NOMINAL CURRENT	APPROXA			104	94	55	52	50	43	35
RECOMMENDED BACK-UP FUSE A				125	125	63	63	63	50	50

CONNECTION OF MAINS AND
ELECTRICAL EQUIPMENT.
BUILDING ON FOUNDATION GROUND CONNECTION VIA RIBBON
FABRIC GROUNDING STRIP. THIS EMC FUNCTIONAL
GROUNDING IS REQUIRED FOR EMC-STANDARD COMPLIANCE.
CABLE CROSS-SECTION 5X50
PROTECTIVE CIRCUIT IS ONLY
PERMISSIBLE IN COMBINATION
WITH AN ALL-CURRENT-SENSITIVE/SELECTIVE
RCD-PROTECTIVE SWITCH

OUTER EDGE OF CHAIN TRACK RESP. FIXED EDGE WORKPIECE OVERHANG 0

CONNECTION FOR COMPRESSED AIR WITH HOSE 3/4" (INSIDE DIAMETER 19MM)
SUPPLY G1"
AIR PRESSURE IN SUPPLY LINE MIN. 6BAR (87 PSI)
STANDARD COMPRESSED AIR QUALITY ACCORDING TO ISO 8573-1
QUALITY CLASS
SOLID IMPURITIES CLASS 3
WATER CONTENT CLASS 4
TOTAL OIL CONTENT CLASS 3

FerWood®
Regeneration. For good.

PROJECT:	
CODE:	NMC035
TYPE:	SINGLE SIDE EDGE BANDER
BRAND:	HOMAG
DESIGNER:	
DATE:	10.08.2017
FILE:	