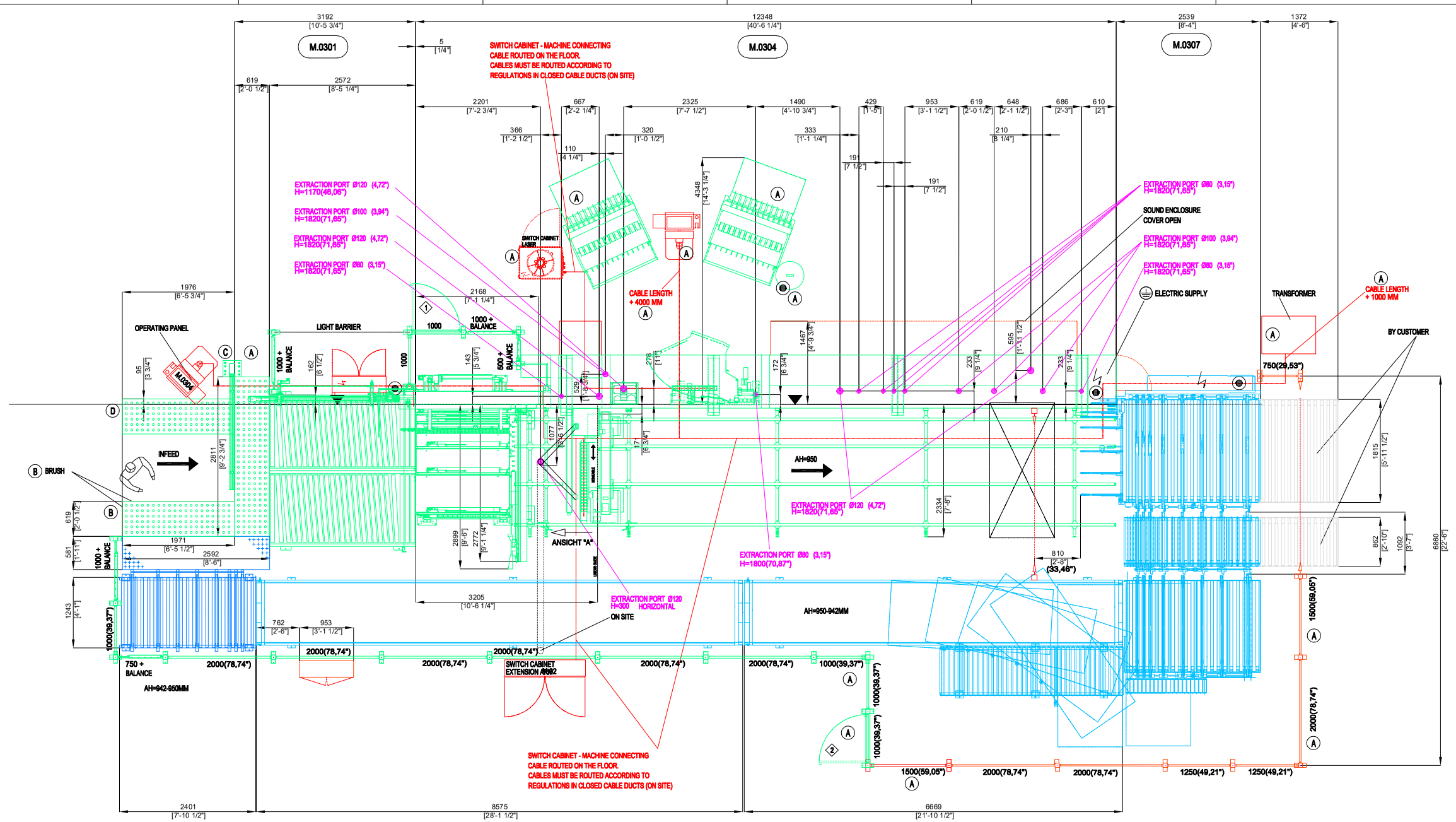

ANSICHT "A"

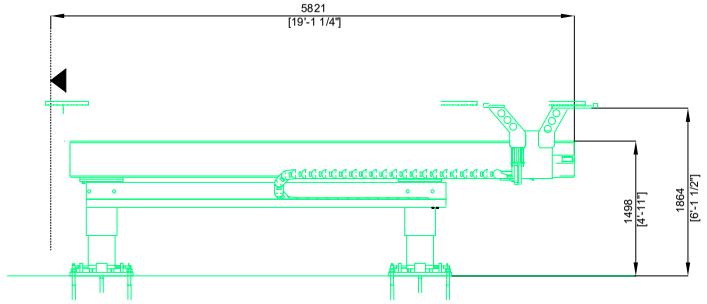

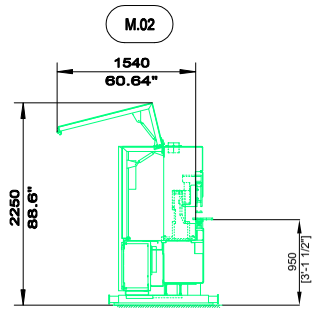

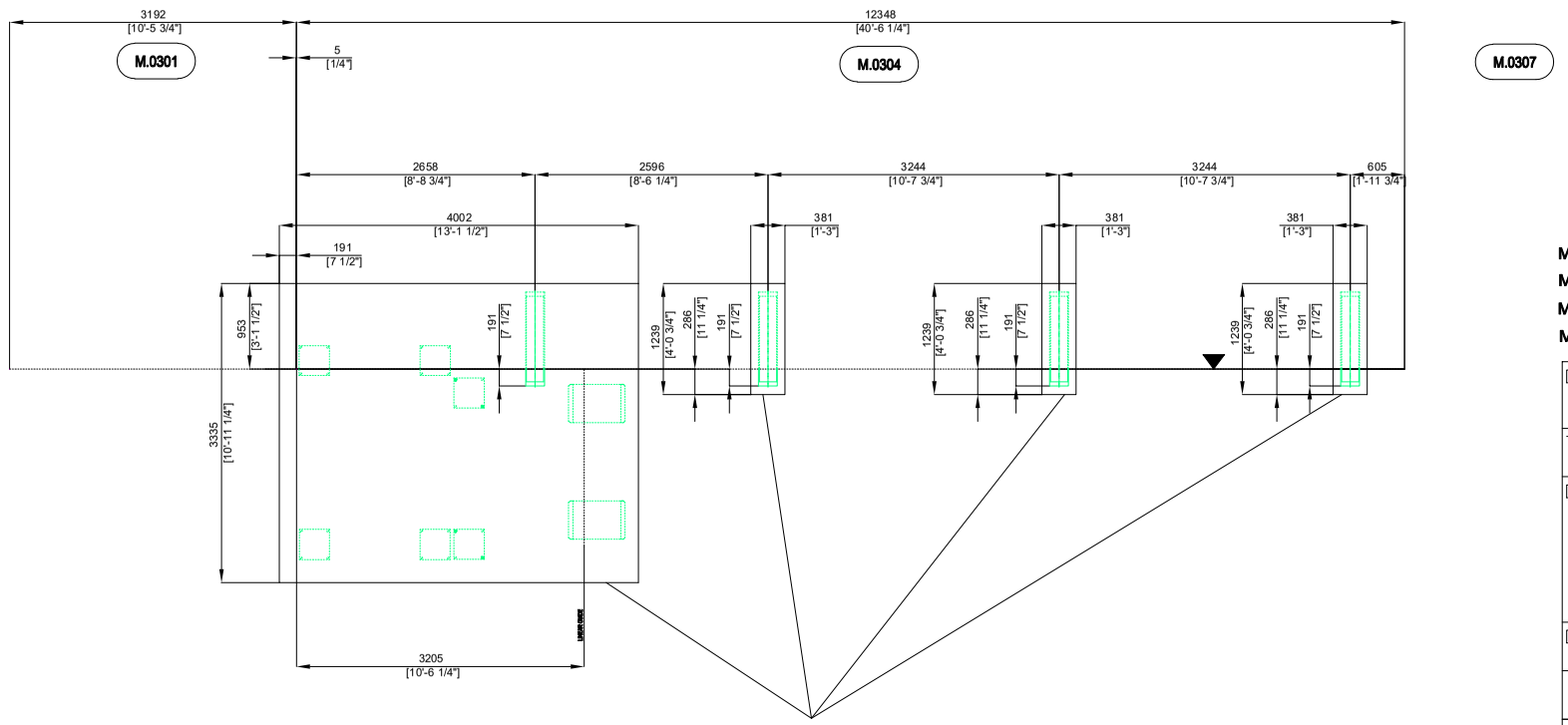

FLOOR LOAD APPROX. 0.2-0.3 N/MM2 IN AREA OF THE MACHINE BEDS MIN. CONCRETE THICKNESS = 200 MM

M.03	KFL350 CELL 1		
M.0301	PROFI TBL100/25/25	0-205-09-7798	HOMAG
M.0304	PROFI KFL350/11/A3/WZ	0-202-09-7741	HOMAG
M.0307	ZHR30/L/165/F	0-305-06-5230	LIGMATECH

Disegnatore: FerWood s.p.a.

Titolo: 007906_La

Descrizione:
HOMAG PROFI TBL M.301
HOMAG PROFI KFL M.304
LIGMATECH ZHR M.307

Data: 27/05/2026

Sistema:

Foglio: A3

FerWood®
BRILLIANT SOLUTIONS FOR WOOD
FerWood spa - Via Langhe 4/a 12042 Pollenzo (CN) Italy
Tel. +39 0172 474073 - Fax. +39 0172 471442
email: info@ferwoodgroup.com

Tutti i diritti sono riservati da Copyright© vietata la riproduzione | All rights reserved by Copyright© is forbidden to reproduce