15. Rover C 6/9 conf. 3 - A1/P2
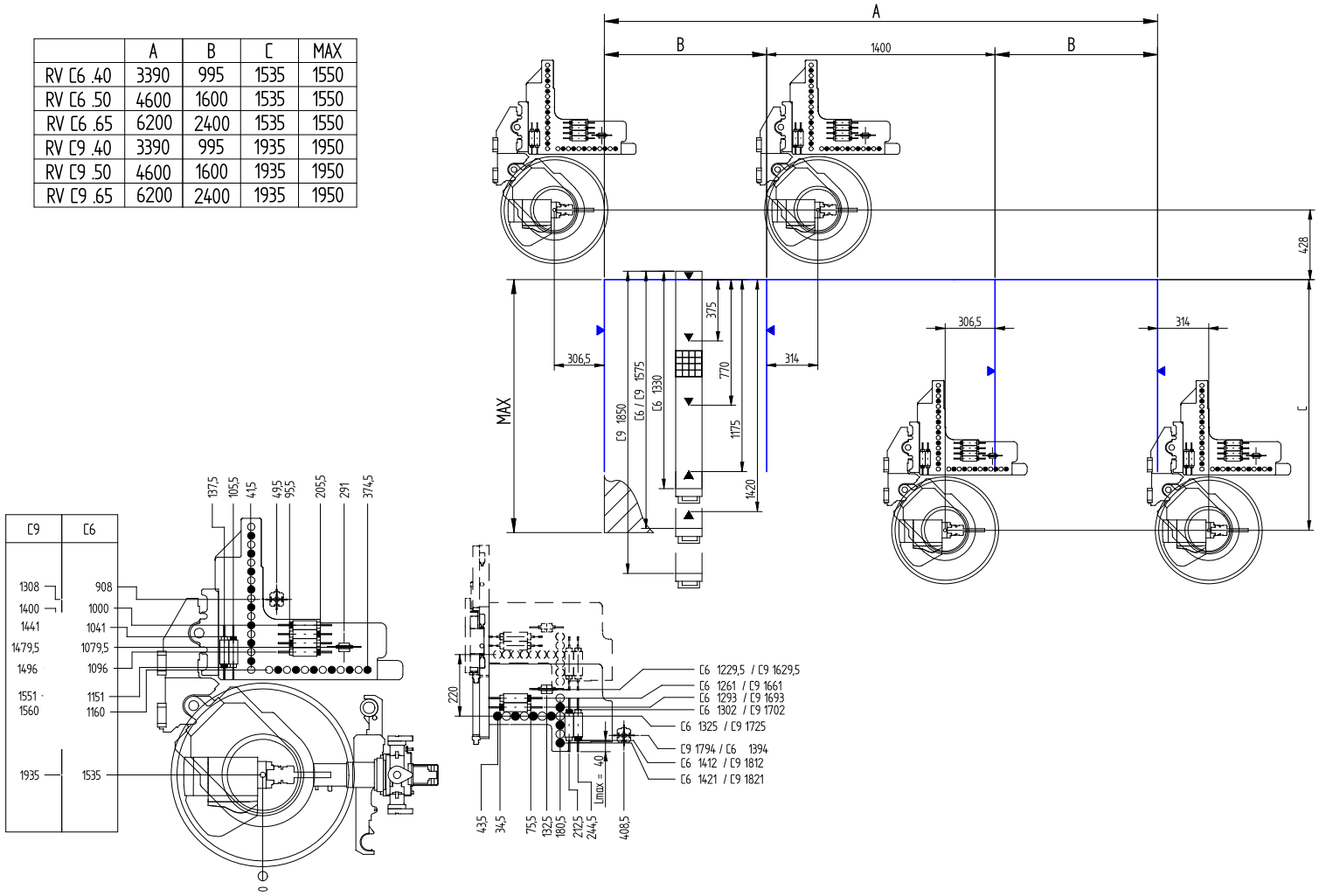
	A	B	C	MAX
RV C6 .40	3390	995	1535	1550
RV C6 .50	4600	1600	1535	1550
RV C6 .65	6200	2400	1535	1550
RV C9 .40	3390	995	1935	1950
RV C9 .50	4600	1600	1935	1950
RV C9 .65	6200	2400	1935	1950